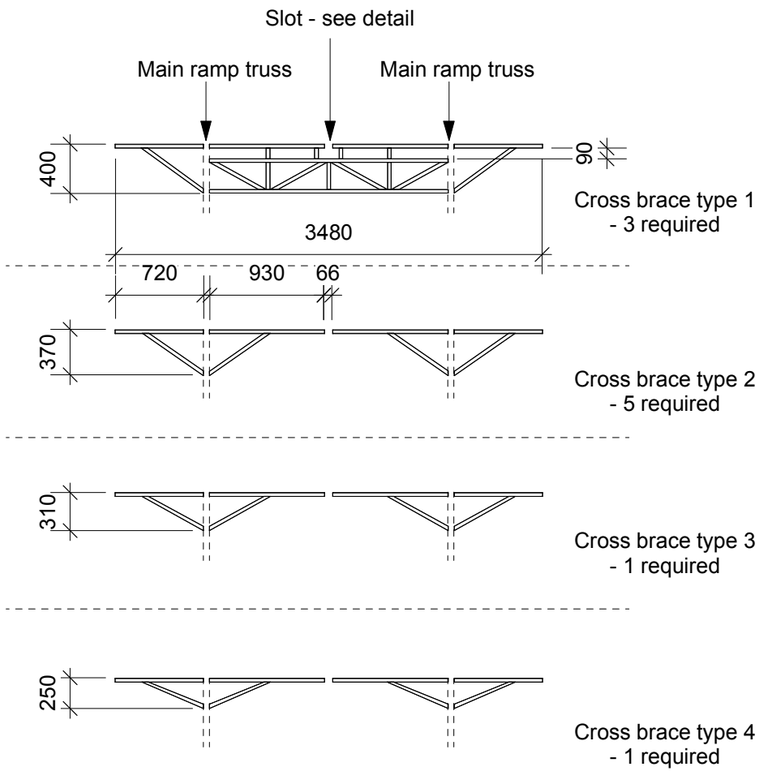

Cross braces for ramp - 30 x 30 RHS

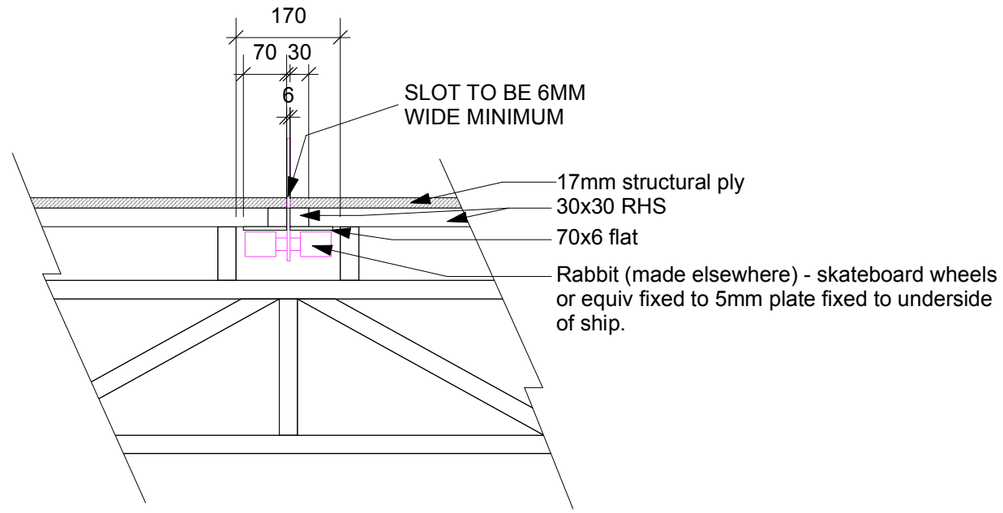

Detail of section through slot & rabbit - scale 1:10

©2007 - ALL RIGHTS RESERVED
Bob Dickason 172 Scamander Ave Scamander Tas 7215
www.bobdickason.com

NOTE: All dimensions to be checked before construction.
Colours shown are schematic only.

DRAWING: Ship track - details (dimens3)
PROJECT: CATS set realisation
COMPANY: ExitLeft Productions
DESIGNER: Bob Dickason
SCALE: 1:50 FILE: 498EXI DATE: 26.9.07
VERSION: 6